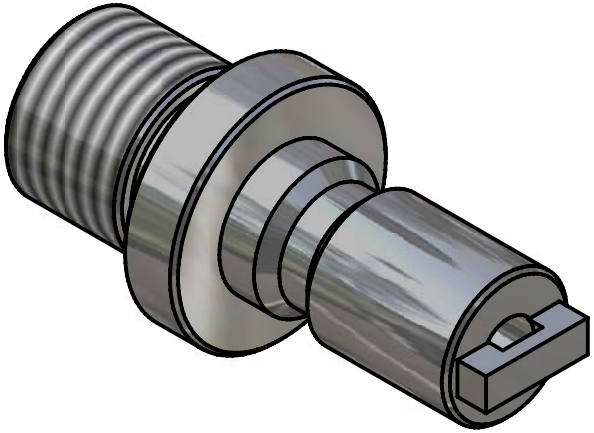

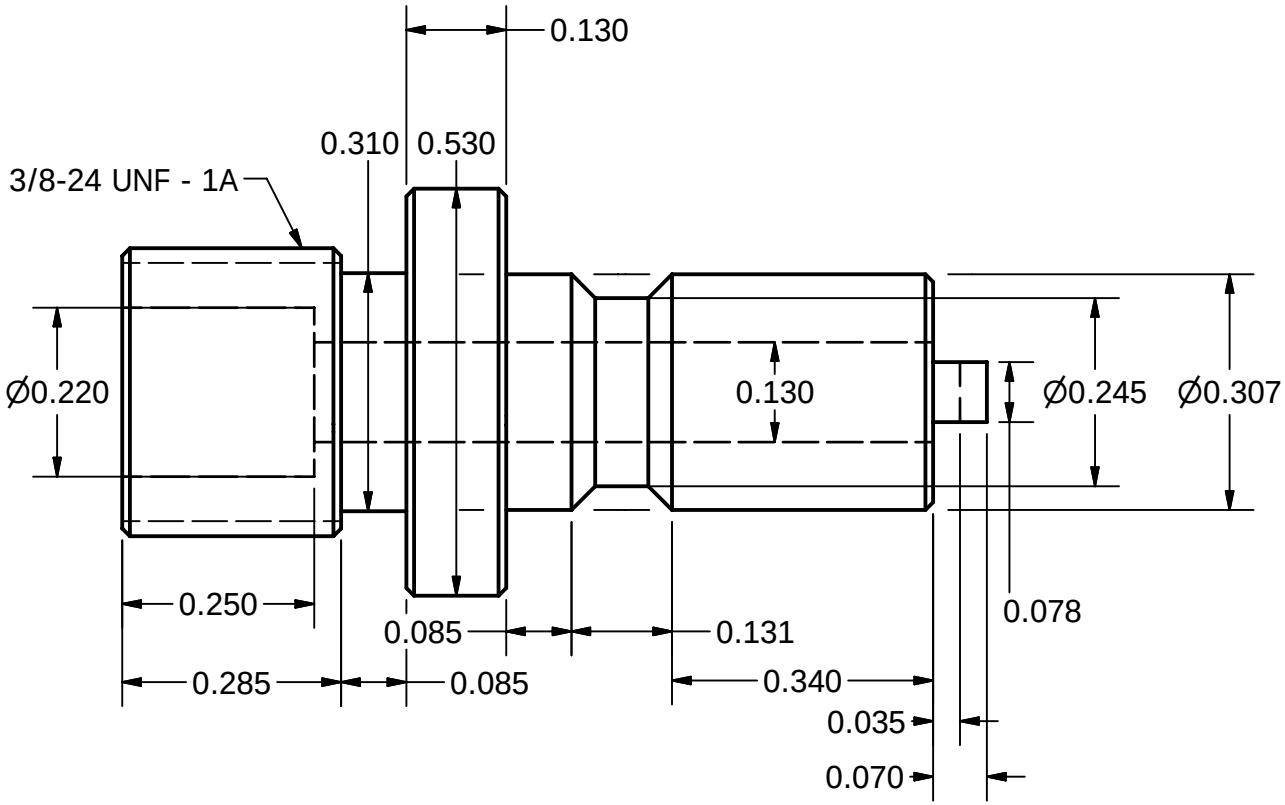

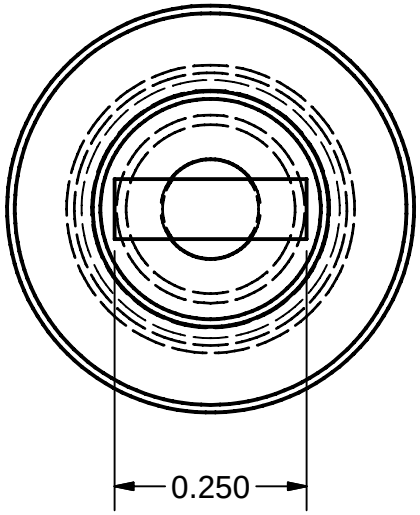

Richard J Kinch, PhD -- Palm Beach County, Florida USA -- http://www.truetex.com
scuba_quick_connect_to_sae_J1926_adapter.idw